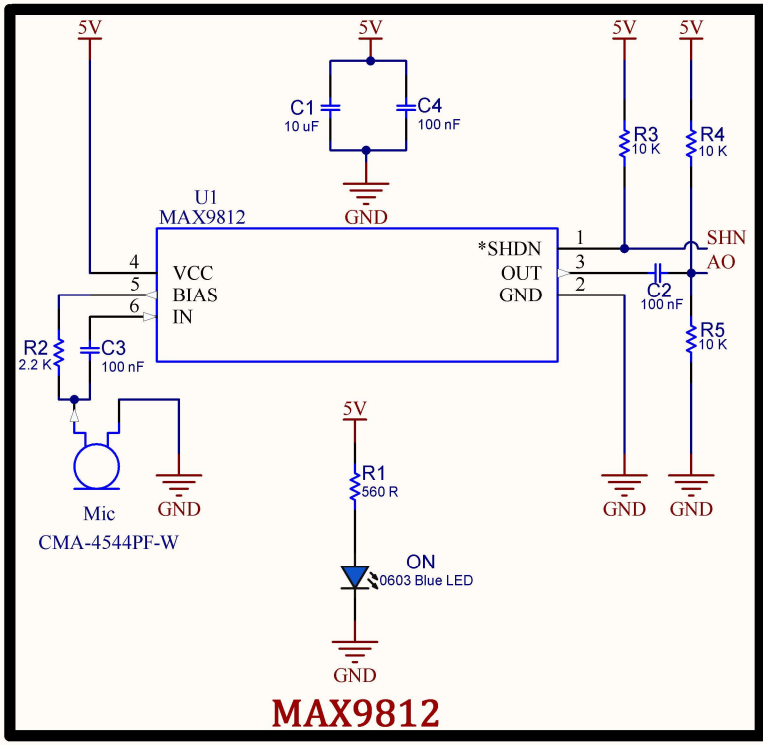

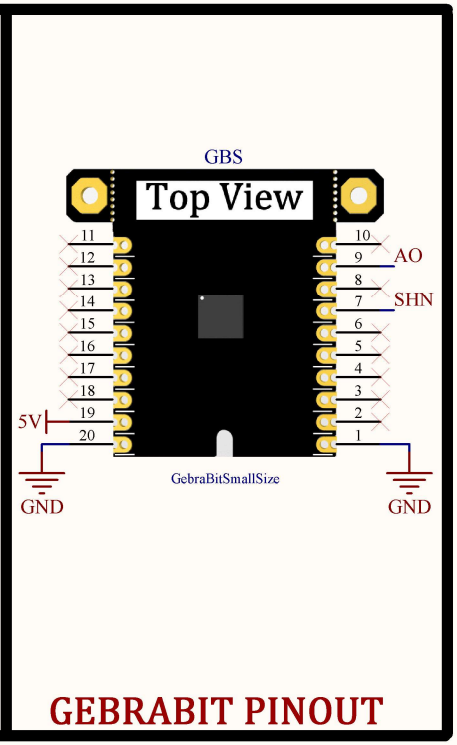

GebraBit

HTTPS://GEBRABIT.COM/

Title: GebraBit MAX9812 Schematics		Variant: [No Variations]
Page Contents: GebraBit MAX9812 Circuits		Checked by: M.Z
Size: Small	SKU CODE: GB700SV	Revision: V2.0
Date: 10/03/2022	**Designed by: GEBRABIT**	Sheet 1 of 1